Alfa Laval GL100

Gas to liquid plate heat exchanger

GL100 is a high-efficiency compact brazed stainless steel heat exchanger designed to handle asymmetrical flows with exceptionally high performance.

GL100's patented plate design enables it to handle extremely high gas temperatures without thermal fatigue with sufficient cooling liquid. This makes GL100 superior as a high-temperature exhaust gas heat exchanger, as well as in all types of condensation applications.

GL100 can handle gas pressure up to 16 bar(g) at room temperature conditions making it superior for compressor applications. The product´s compact size, versatility and excellent heat transfer makes it a perfect choice for a wide range of asymmetrical heat transfer applications. GL100 in single configuration is suitable for max. 7000 kg/h gas.



Technical Data

Side (A) "High density":	Water / Liquid / High pressure gas
Side (B) "Low density":	Gas / Steam
Plate material:	ASTM 316L / DIN 1.4404 / SS2348
Connections / Cover plates:	ASTM 304 / DIN 1.4301 / SS2333
Brazing material:	Copper (Cu)
Min. / Max. temperatures*:	-160°C / +190°C
Max. design pressure at	
-160/25/190°C:	Side A: 0/17(15.8) bar(a); 0/247(229) psi(a)
	Side B: 0/17(13) bar(a); 0/247(188) psi(a)
	For higher pressure see datasheet GLH100
Primary heat transfer surface/plate:	≈ 19 dm2
Manufacturing standard:	EN13445-3
PED Side A:	In conformance with 2014/68/EU
	Fluid Group: 1 & 2

* Max. design temperature refers to the temperature of the plate material. Gas inlet temperatures can exceed the max. design temperature; the actual acceptable gas inlet temperature will vary from case to case.

Standard Connections and Versions for GL100

For configuration options see the product description Configuration options for Alfa Laval GL.

Side A
G 2.5

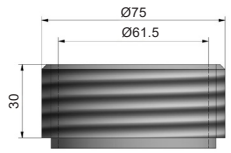

Side B
W 110 (DN100)

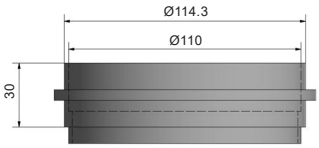

Condensate
G 1

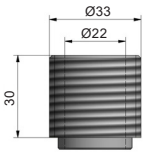

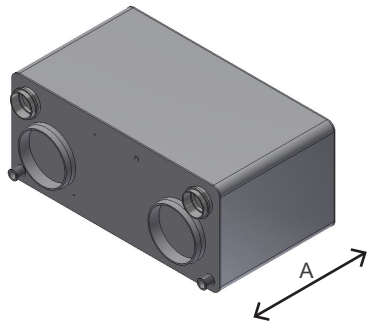

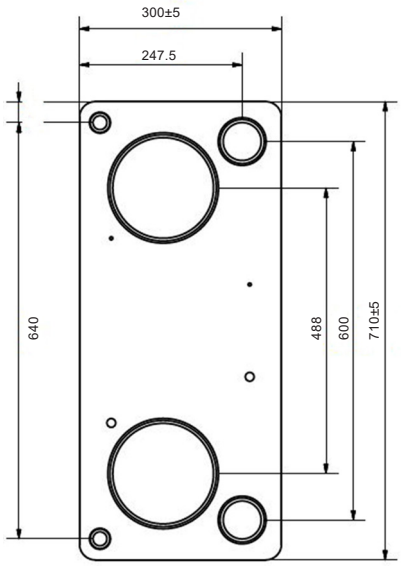

Item name	Number of plates	Connection	Height (mm)		Weight empty ≈kg	Volume (l)	
			A	Tolerances		Side A	Side B
GL100-20AM-F	20	W110-G2.5	88	±6.0	28	6.3	9.5
GL100-40AM-F	40	W110-G2.5	168	±7.5	41	12.6	19.0
GL100-70AM-F	70	W110-G2.5	288	±9.0	61	22.0	33.2
GL100-100AM-F	100	W110-G2.5	408	±10.5	80	31.5	47.5
GL100-140AM-F	140	W110-G2.5	568	±12.0	106	44.1	66.5

This document and its contents are subject to copyrights and other intellectual property rights owned by Alfa Laval Corporate AB. No part of this document may be copied, re-produced or transmitted in any form or by any means, or for any purpose, without Alfa Laval Corporate AB's prior express written permission. Information and services provided in this document are made as a benefit and service to the user, and no representations or warranties are made about the accuracy or suitability of this information and these services for any purpose. All rights are reserved.

© Alfa Laval Corporate AB

How to contact Alfa Laval
Up-to-date Alfa Laval contact details for all countries are always available on our website at www.alfalaval.com